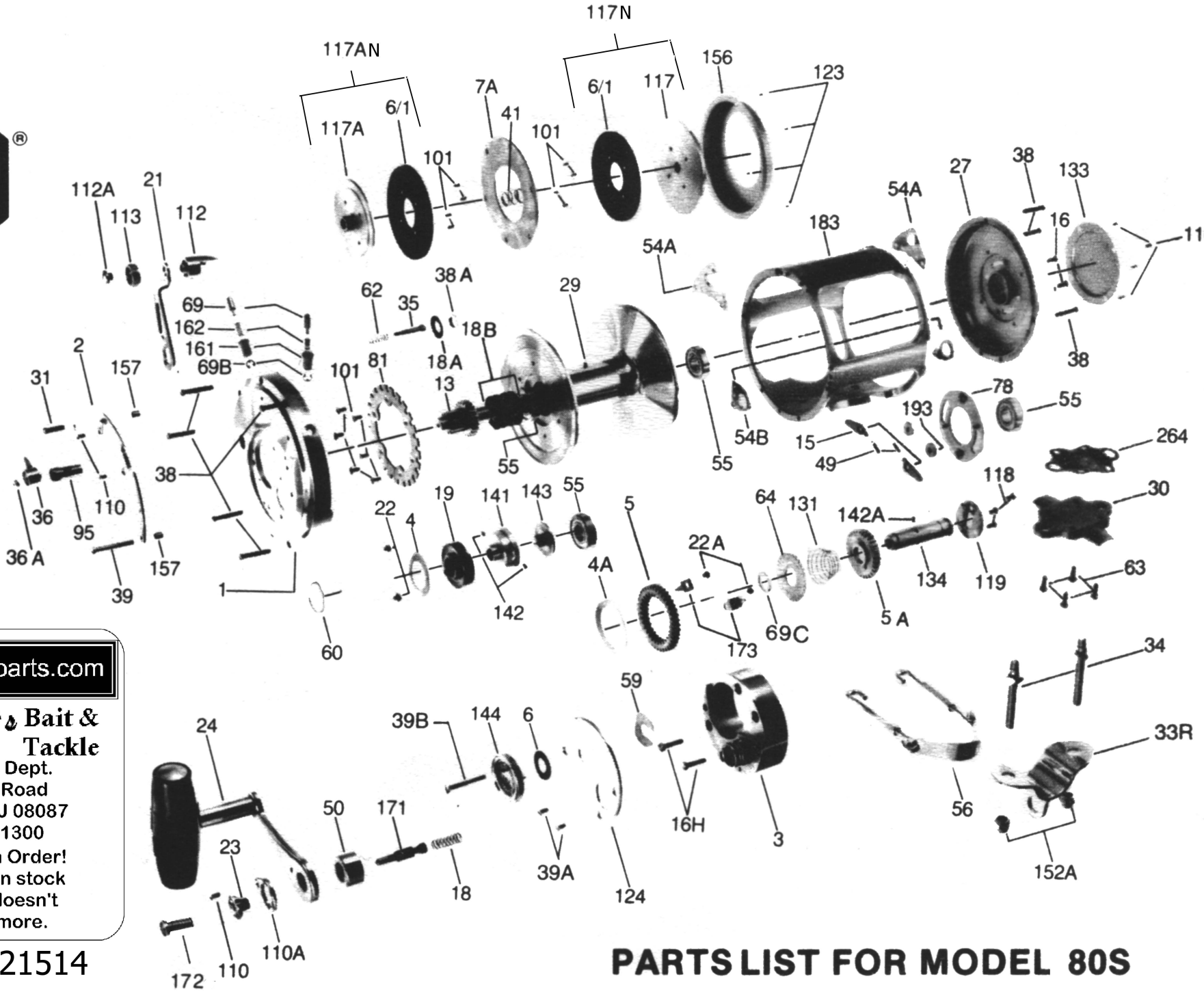

www.PENNparts.com

Scott's Bait & Tackle

Penn Parts Dept.
945 Radio Road
Tuckerton NJ 08087
(609) 296-1300
No Minimum Order!
Plus, Parts in stock
that Penn doesn't
carry anymore.

SBT Ver. 021514

PARTS LIST FOR MODEL 80S

Penn Reel Parts list for: Model: 80S International

KEY NO	PART NO.	DESCRIPTION
1	1-80S	RIGHT SIDE PLATE ASSEMBLY
2	2-80	QUADRANT RING
3	3-80S	BRIDGE
4	4-50	CAM THRUST WASHER (OLD #4-80)
4A	4-130	THRUST WASHER
5	5-80HS	HIGH MAIN GEAR
5A	5-80LS	LOW MAIN GEAR
6	6-155	LEATHER SPACER WASHER
6/1	***6-50******	***DRAG WASHER (2 REQUIRED)***
7A	7A-80	FLOATING DRAG WASHER
13	13-80S	PINION GEAR
15	15-130	DOG
16	16-80S	DOG PLATE SCREW
16H	16H-130	HIDDEN BRIDGE SCREWS (2 REQUIRED)
18	18-114	PLUNGER SPRING
18A	95A-20	CLICK BUSHING WASHER
18B	18-80W	DISC CLUTCH SPRINGS (4 REQUIRED)
19	19-80	ECCENTRIC CAM
21	21-80S	ECCENTRIC LEVER
22	22-109	HOLD DOWN SCREW (2 REQUIRED)
22A	63-349	RETAINING SCREW (2 REQUIRED)
23	23-80S	HANDLE SCREW
24	24-80	HANDLE COMPLETE
27	27-80S	L.S. PLATE ASSEMBLY
29	29L-80S	SPOOL
30	30-80S	STAND
31	31-20	QUADRANT SCREW
33R	33R-116	RINGED ROD CLAMP
34	34-80T	ROD CLAMP SCREW
35	35-80TN	CLICK TONGUE
36A	36-700	CLICK TONGUE NUT
36	36-50	CLICK BUTTON
38	38-50	FRAME POST (11 REQUIRED)
38A	38-710	CLICK BUSHING NUT
39	39-50	QUADRANT SCREW, LONG (1 REQUIRED)
39A	39A-80S	COVER SCREWS (2 REQUIRED)
39B	39-80S	COVER SCREW, LONG (1 REQUIRED)
41	41-50	LEFT SIDE BEARING SPRING
49	49-710	DOG SPRING
50	50-80S	GEAR STUD COVER
54A	54A-80S	TOP HARNESS LUGS (2 REQUIRED)
54B	54B-80S	BOTTOM HARNESS LUGS (2 REQUIRED)
55	55-80	BALL BEARING
56	56C-80ST	ROD BRACE
59	59-50	SLOTTED WASHER
60	60-50	BACKING WASHER
62	62-50	CLICK SPRING
63	63-30T	STAND SCREW
64	64-80S	IDLER GEAR
69	69-50	LOCATING PIN
69B	69B-50	RETAINING CLIPS (3 REQUIRED)
69C	69B-80S	GEAR STUD CLIP
78	78-80S	DOG PLATE
81	81-80S	RATCHET
95	95-80	CLICK BUSHING
101	101-30	DRIVE PLATE SCREW
110	110-50	HANDLE LOCK SCREW
110A	110A-50	HANDLE LOCKING PLATE
112	112-50	ECCENTRIC LEVER KNOB
112A	112A-50	ECCENTRIC KNOB SCREW
113	113-50	ECCENTRIC LEVER CAP
117	***117-80S******	***DRIVE PLATE (OUTER)***
117A	***117A-80******	***DRIVE PLATE (INNER)***
118	118-80S	MAIN GEAR PLATE SCREW
119	119-50	MAIN GEAR PLATE
123	123-50	DRAG COVER SCREW
124	124-80S	BRIDGE COVER
131	131-80S	CONICAL SPRING
133	133-80S	LEFT SIDE COVER PLATE
134	134-80S	GEAR STUD
141	141-80	CAM FOLLOWER
142	142-80	CAM FOLLOWER PINS (2 REQUIRED)
142A	142-50	PINS (2 REQUIRED)
143	143-80	ADJUSTING SCREW
144	144-50	PRE-SET KNOB
152A	152A-80T	ROD CLAMP ACORN NUT
156	156-80S	DRAG COVER
157	157-50	QUADRANT BUSHING (2 REQUIRED)
161	161-50	LOCATING PIN BUSHINGS
162	162-50	LOCATING PIN SPRINGS (2 REQUIRED)
171	171-80S	PLUNGER
172	172N-80S	PLUNGER CAP
173	173-80S	GEAR RETAINER
183	183-80S	TUBE FRAME
193	193-80S	LOCK NUT
264	264-80T	STAND GASKET

NOTE: Many of www.pennparts.com schematics include changes that were either made by Penn, or errors found and corrected by our parts dept.
SBT Version 021514

**NOT SHOWN ON SCHEMATIC

**154 154-80 Shim, Spool Shaft

*** IMPORTANT INFO: PENN replaced the drag washer and drive plates for the newer international series reels with a combined drive plate. Penn did not manufacture a combined drive plate specifically for the older 80, 80W, 80S or 80SW reels

IF YOU NEED THE DRAG WASHER OR DRIVE PLATE(s): Our parts dept. at www.pennparts.com has found that: The 117N-80ST drive plate works as a substitute for the 117-80S plate w/6A-50 washer used on the 80S and 80SW. It has not yet been tested on the 80 and 80W reels - so we are not sure if it will also fit them

The 117AN-80T drive plate works as a substitute for the 117A-80 plate w/6A-50 washer on the 80, 80W 80S and 80SW. (The outside diameter is about 1/8" smaller but it will function).