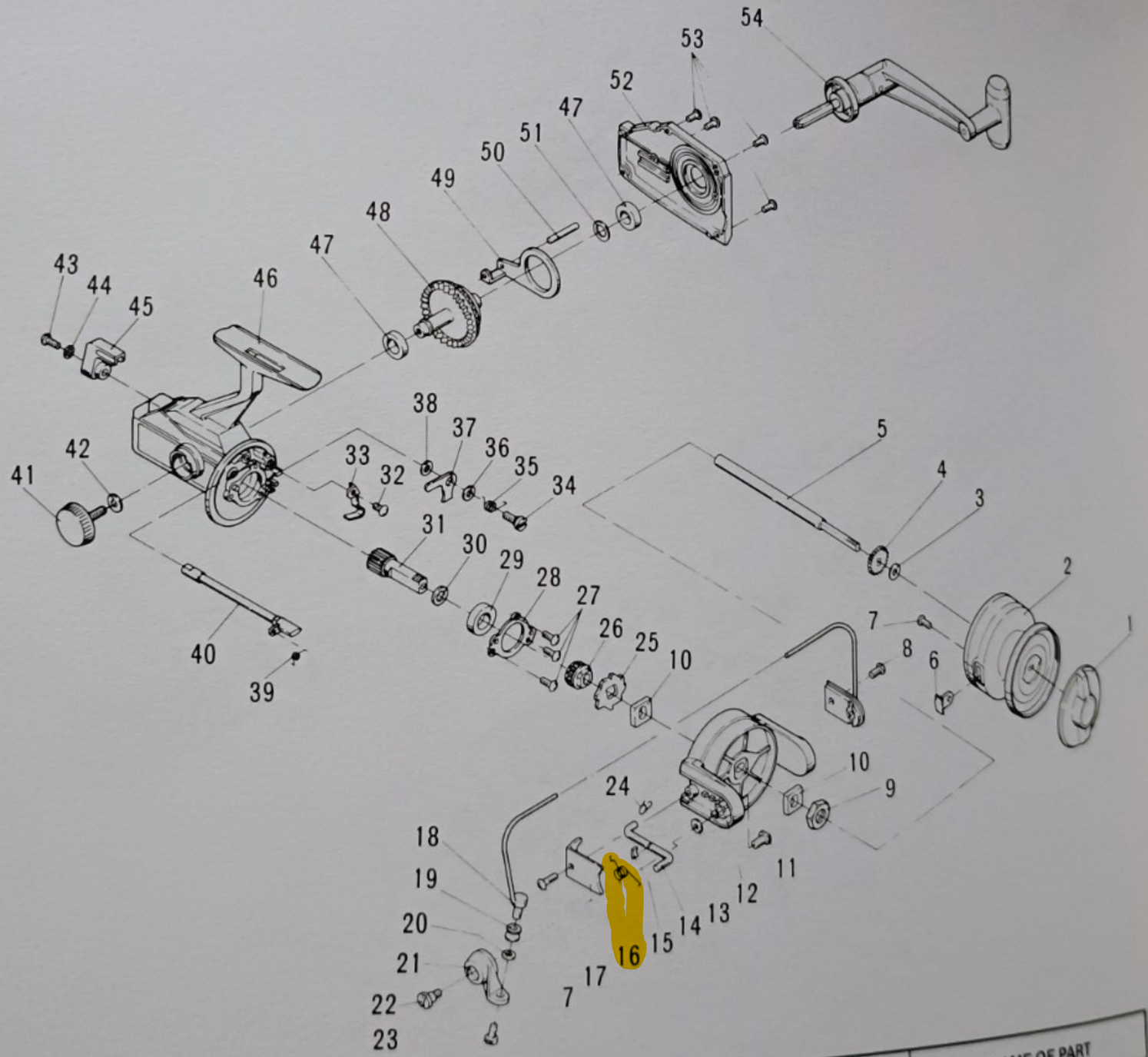

NO.		PART NO.	NAME OF PART