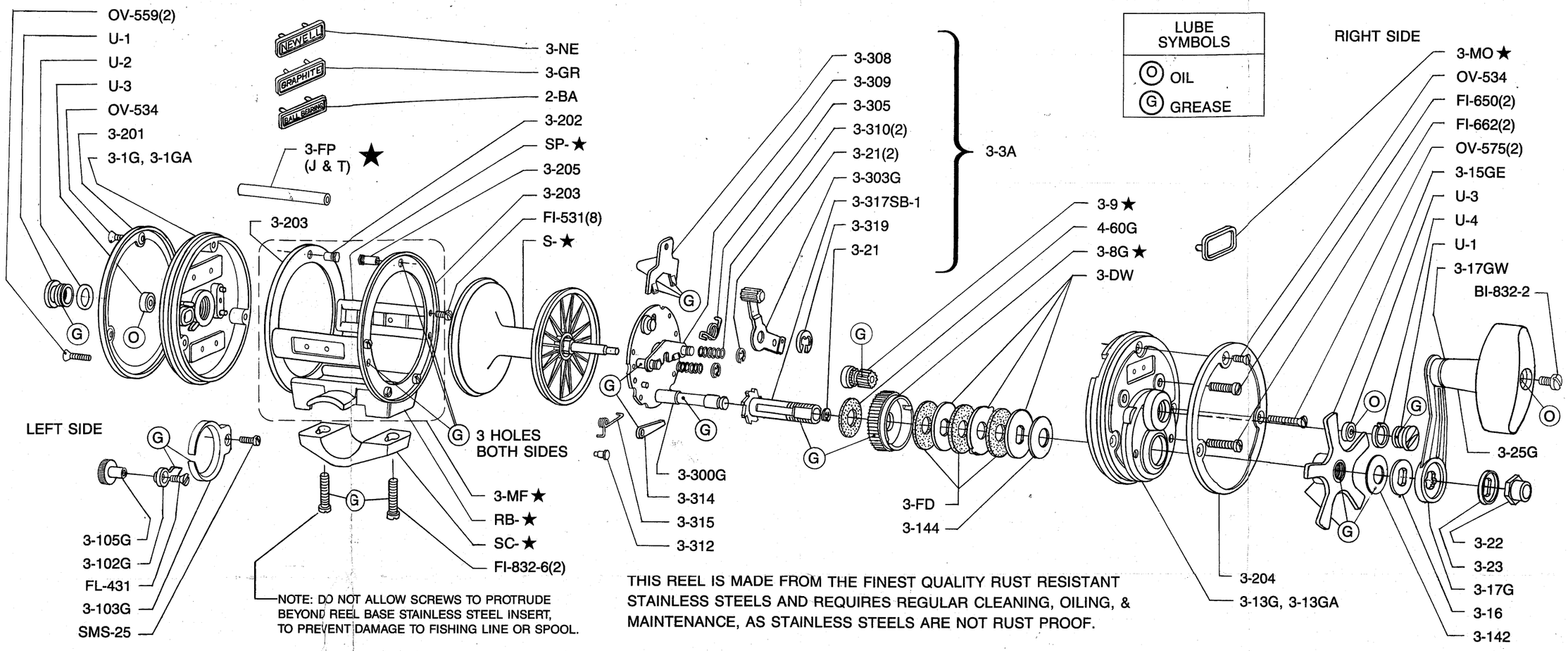

NOTE: DO NOT ALLOW SCREWS TO PROTRUDE BEYOND REEL BASE STAINLESS STEEL INSERT, TO PREVENT DAMAGE TO FISHING LINE OR SPOOL.

THIS REEL IS MADE FROM THE FINEST QUALITY RUST RESISTANT STAINLESS STEELS AND REQUIRES REGULAR CLEANING, OILING, & MAINTENANCE, AS STAINLESS STEELS ARE NOT RUST PROOF.

G300 PARTS LIST

PART NO.	DESCRIPTION	LIST PRICES
	STAINLESS STEEL SCREWS	
FL-431	4-40 5/16″ Flat head screw.	$ .20 ea.
FI-531	5-40 9/32″ Fillister head screw. (8-req)	.20 ea.
FI-650	6-40 1/2″ Fillister head screw. (2-req)	.20 ea.
FI-662	6-40 5/8″ Fillister head screw. (2-req)	.20 ea.
FI-832-6	8-32 3/4″ Fillister head screw. (2 req)	.20 ea.
BI-832-2	8-32 1/4″ Binder head screw.	.20 ea.
OV-534	5-40 1/4″ Oval head screw. (2-req)	.25 ea.
OV-559	5-40 19/32″ Oval head screw. (2-req)	.25 ea.
OV-575	5-40 3/4″ Oval head screw. (2-req)	.20 ea.
SMS-25	1/4″ Self threading screw.	.20 ea.
	GENERAL PARTS	
U-1	Bearing cup. (2-req)	5.40 ea.
U-2	O-Ring.	.50 ea.
U-3	Stainless Steel Ball Bearings. (2-req)	7.75 ea.
U-4	Split ring Blue. (.050″)	.50 ea.
	Split ring Orange. (.060″) *SPECIFY*	.50 ea.
	Split ring White. (.070″) *COLOR*	.50 ea.
	Split ring Black. (.080″)	.50 ea.
2-BA	Ball Bearing logo.	2.35 ea.
3-GR	Graphite logo.	2.35 ea.
3-NE	Newell Name Plate.	2.35 ea.
3-DW	Stainless Steel brake disc, set of 3.	2.35 set
3-FD	Fiber Friction Washer. (3-req)	.70 ea.
3-MF	Master Frame Complete w/2 rings, 2 support posts, 1 reel base, 1 speed clamp, 2 screws assembled. *Specify Model.*	39.00 ea.

PART NO.	DESCRIPTION	LIST PRICES
3-MO	Model Number Logo. *Specify model number.*	2.35 ea.
3-FP	Stainless Steel Frame Post, *Specify Model.*	5.05 ea.
3-1G	Left side plate only.	14.80 ea.
3-1GA	Left side plate assembly. Includes: 2 logos, clicker dog, clicker button, button circlip, clicker spring and screw.	20.90 ea.
3-3A	Bridge Plate assembly. Includes: Bridge plate, jack handle, jack, jack spring, ratchet dog, ratchet dog spring, bridge sleeve, and circlip.	49.75 ea.
3-13G	Right side plate only.	16.80 ea.
3-13GA	Right side plate assembly. Includes: logo. *Specify Model.*	19.20 ea.
3-17G	Graphite Handle.	11.30 ea.
3-17GW	Stainless steel washer.	.80 ea.
3-25G	Crank Handle knob.	2.50 ea.
3-201	Stainless Steel left side end ring.	7.40 ea.
3-204	Stainless Steel right side end ring.	7.40 ea.
3-203	Stainless Steel right side inner ring.	7.40 ea.
3-303G	Stainless Steel Jack Handle, assembly.	6.40 ea.
3-308	Stainless Steel Jack.	1.35 ea.
3-300G	Bridge Plate.	17.50 ea.
3-8G	Stainless Steel Main Gear, 5-1 ratio.	23.55 ea.
3-8M	Stainless Steel Main Gear, 4-1 ratio.	16.80 ea.

PART NO.	DESCRIPTION	LIST PRICES
3-9	Stainless Steel Pinion Gear, 5-1 ratio.	15.50 ea.
3-9M	Stainless Steel Pinion Gear, 4-1 ratio.	11.45 ea.
3-15GE	Star drag assembly.	7.75 ea.
3-16	Handle washer.	.40 ea.
3-21	Circlip. (3-req)	.40 ea.
3-22	Stainless Steel handle nut.	3.40 ea.
3-23	Nylon lock washer.	.50 ea.
3-102G	Clicker dog.	1.00 ea.
3-103G	Clicker spring.	1.90 ea.
3-105G	Clicker button.	1.30 ea.
3-142	Belleville spring. (.012″)	.60 ea.
3-144	Belleville spring. (.036″)	.60 ea.
3-202	Left side threaded insert.	1.35 ea.
3-205	Right side threaded insert.	1.35 ea.
3-305	Jack spring.	.80 ea.
3-309	Yoke.	1.35 ea.
3-310	Yoke spring. (2-req)	.80 ea.
3-312	Ratchet Dog Spring Stud.	1.05 ea.
3-314	Ratchet Dog.	1.15 ea.
3-315	Ratchet Dog Spring.	.95 ea.
3-317SB-1	Bridge Sleeve.	18.80 ea.
3-319	Circlip.	.40 ea.
4-60G	Thrust Washer.	.80 ea.
SC-10	Speed Clamp fit rods 3/4″-7/8″.	3.90 ea.
SC-15	Speed Clamp fit rods 7/8″-11/16″.	4.10 ea.
S-★	Specify Model Number.	24.25 ea.
RB-★	Specify Model Number.	18.20 ea.
SP-★	Specify Model Number.	9.45 set

PRICES SUBJECT TO CHANGE WITHOUT NOTICE.

NOTES

REEL MODEL	SPOOL ①	SPEED CLAMP ②	ROD SIZE ③
G322	S-322N	SC-10★	3/4″-7/8″
G332	S-332G	SC-20	7/8″ TO 1-1/16″
G338	S-338G		
G344	S-344G		

④ DUE TO POSSIBLE ELECTROLYSIS DO NOT STORE REEL ON UNPROTECTED BRASS REEL SEAT FOR EXTENDED PERIOD OF TIME.

⑤ USE "CINCH" TYPE KNOT WHEN USING DACRON LINE, TO PREVENT LINE SLIPPAGE ON SPOOL.

★ ALWAYS SPECIFY REEL MODEL NUMBER.