Bait Casting
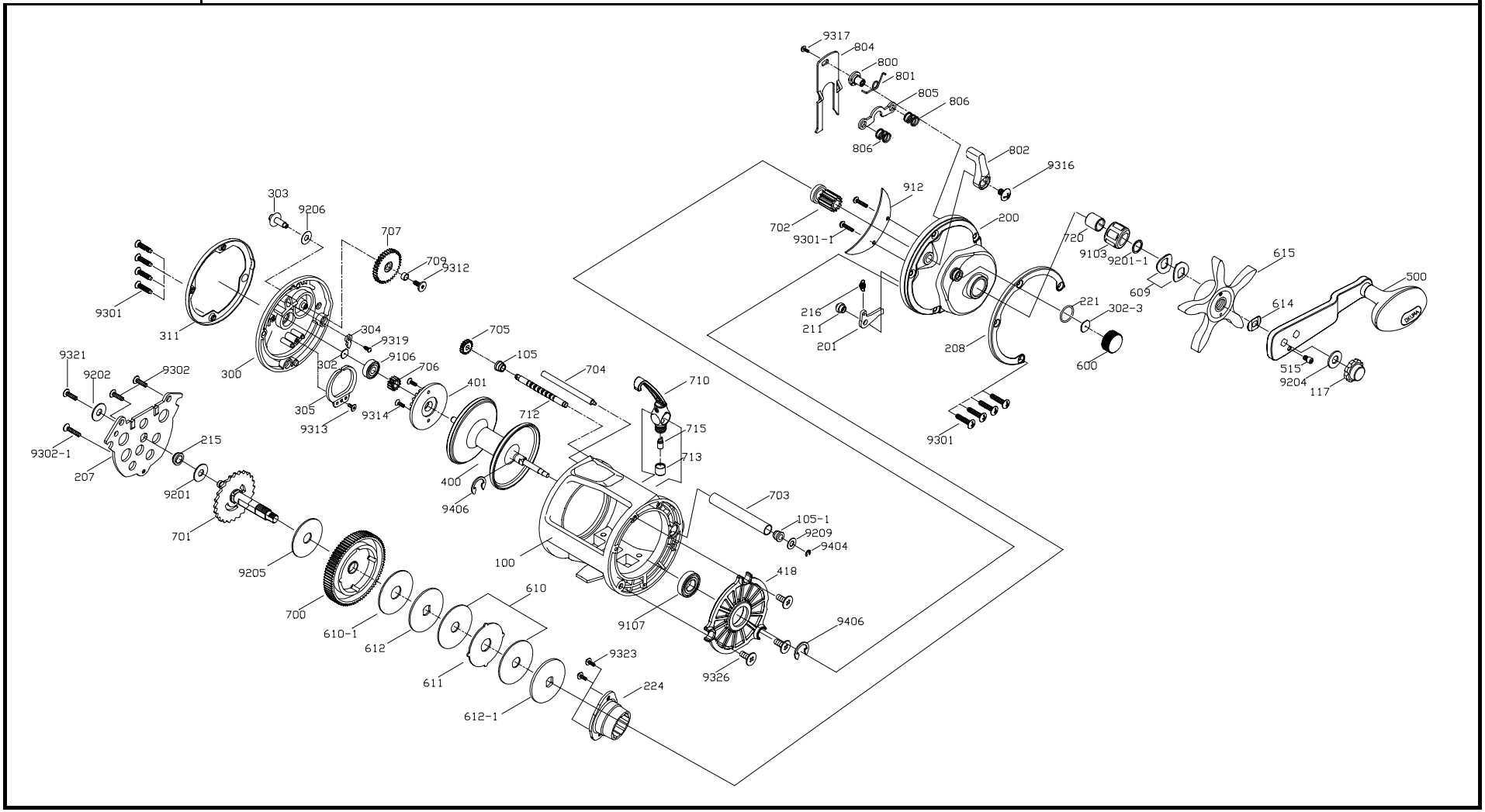
CV - 20L